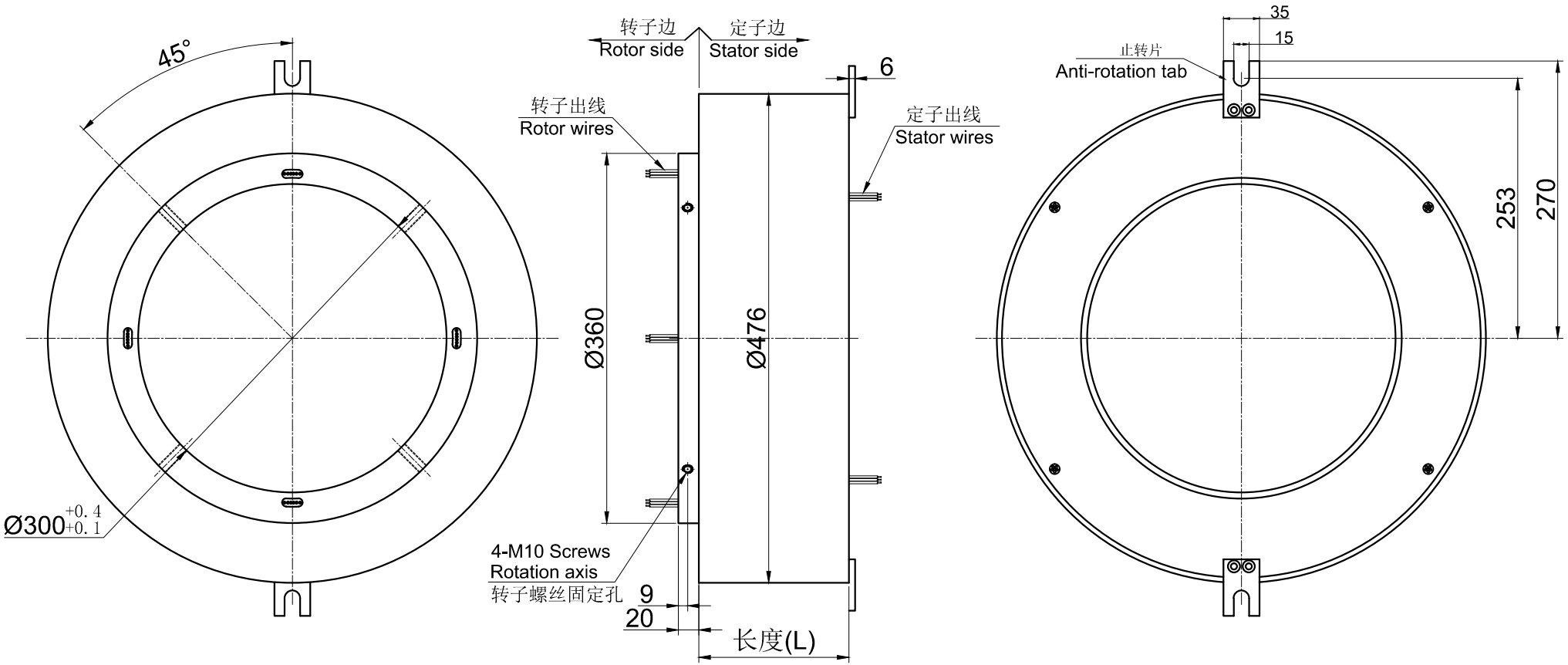
45°
Ø300 +0.4 +0.1
转子边
Rotor side
定子边
Stator side
6
转子出线
Rotor wires
定子出线
Stator wires
Ø360
Ø476
4-M10 Screws
Rotation axis
转子螺丝固定孔
9
20
长度(L)
35
15
止转片
Anti-rotation tab
253
270